

## 2 FEATURES OF NEW TQ SERIES



Low backlash planetary drives of TQ series combine outstanding performances with a distinctive Italian style which makes them immediately recognizable amongst similar products within the reference industry.
Their design and construction has been developed with the goal of offering consumers a line of products which feature absolute and consistent Quality, which in turn provides a competitive advantage for machines and systems that adopt them as transmission devices.

- TQ features two classes of precision, corresponding to the following values of circumferential backlash
  1-stage units: standard $\varphi_S \leq 3'$ reduced $\varphi_R \leq 2'$ ( $\varphi_S \leq 4'$; $\varphi_R \leq 2'$ for TQ 060 and TQ 070)
  2-stage units: standard $\varphi_S \leq 5'$ reduced $\varphi_R \leq 3'$ ($\varphi_S \leq 6'$; $\varphi_R \leq 4'$ for TQ 060 and TQ 070)
- A high IP rating (IP65) provides inner parts with protection against the ingress of dust and liquids.
- Input section oil seals made from a Fluoroelastomer compound are supplied as standard.
- Noise pressure level $60 \leq L_p \leq 70$ dB(A). Conditions: distance 1 m ; measured without load and an input speed of $n_1 = 3000$ min$^{-1}$; i = 10.
- Numerous adapters allow matching the most popular brands of servomotors.
- Lubrication optimized for the type of duty specified when ordering.
  In the absence of contamination the lubricant requires no periodical changes.

| duty | TQ 060 ... TQ 160 | other seals |
|---|---|---|
| **S1** (continuous) | Synthetic oil viscosity ISO VG 220 | Fluoroelastomer |
| **S5** (intermittent) | NLGI grease consistency 00 | NBR |

- Ambient temperature min -20°C, max +30°C. For temperature higher than 30°C please consider derating factor $f_T$.
- Housing temperature must not exceed $T_{max}$ = 90°C.

| Distribution of nominal torque $M_{n2}$ [Nm] | | | | | | | | | | | | | | |
|---|---|---|---|---|---|---|---|---|---|---|---|---|---|---|
| [i] | **3** | **4** | **5** | **7** | **10** | **16** | **20** | **25** | **28** | **35** | **40** | **50** | **70** | **100** |
| **TQ 060** | 21 | 30 | 30 | 25 | 20 | 30 | 30 | 30 | 30 | 30 | 30 | 30 | 25 | 20 |
| **TQ 070** | 45 | 70 | 70 | 60 | 40 | 70 | 70 | 70 | 70 | 70 | 70 | 70 | 60 | 40 |
| **TQ 090** | 130 | 200 | 180 | 160 | 110 | 200 | 180 | 180 | 200 | 180 | 200 | 180 | 160 | 110 |
| **TQ 130** | 260 | 400 | 400 | 360 | 280 | 400 | 400 | 400 | 400 | 400 | 400 | 400 | 360 | 280 |
| **TQ 160** | 530 | 800 | 800 | 750 | 550 | 800 | 800 | 800 | 800 | 800 | 800 | 800 | 750 | 550 |

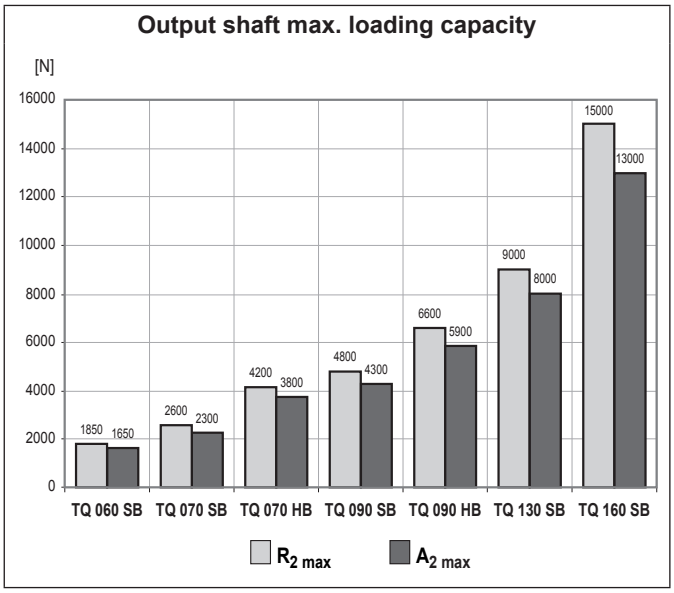


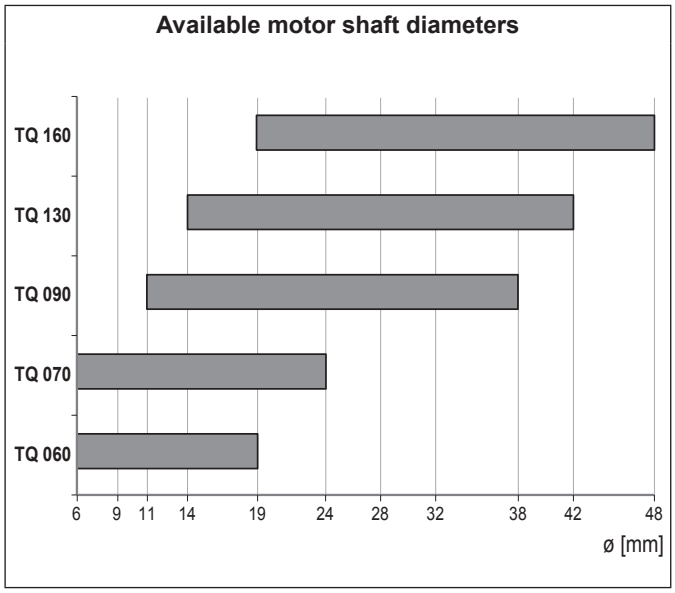

## 2.1 ORDERING CODE

**TQ** **130** **1** **3** **STD** **80A3** **CD** **19** **S5** **SB** **KL** **UH1**

- **TQ** — SERIES
  - **TQ**
- **130** — FRAME SIZE
  - **060** **070** **090** **130** **160**
- **1** — REDUCTIONS
  - **1** **2**
- **3** — GEAR RATIO
- **STD** — BACKLASH

| | 1 reduction | 1 reduction (TQ060, TQ070 only) | 2 reductions | 2 reductions (TQ060, TQ070 only) |
|---|---|---|---|---|
| **STD** | $\varphi_S \leq 3'$ | $\varphi_S \leq 4'$ | $\varphi_S \leq 5'$ | $\varphi_S \leq 6'$ |
| **LOW** | $\varphi_R \leq 2'$ | $\varphi_R \leq 2'$ | $\varphi_R \leq 3'$ | $\varphi_R \leq 4'$ |

- **80A3** — INPUT SECTION
  - **30A ... 230A** motor adapter
  - **FM** without motor adapter
- **CD** — MOTOR COUPLING
  - **CD** clamping device
- **19** — INPUT SHAFT BORE
  - **6 ... 48**
- **S5** — DUTY
  - **S1** continuous duty
  - **S5** intermittent duty
- **SB** — OUTPUT SHAFT BEARINGS
  - **SB** standard
  - **HB** reinforced (TQ 070 - TQ 090)
- **KL** — OUTPUT SHAFT CONFIGURATION
  - **KL** smooth keyless shaft
  - **KE** keyed shaft
- **UH1** — LUBRICANT
  - **–** standard
  - **UH1** food grade synthetic lubricant

## 2.2 DIMENSIONS AND TECHNICAL SPECIFICATIONS

# TQ 060

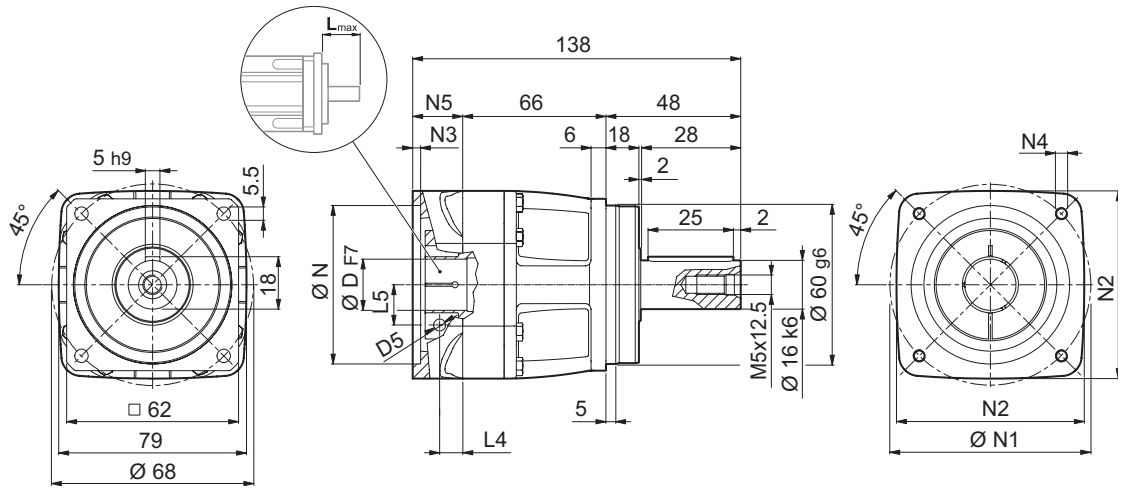


| | Kg |
|---|---|
| TQ 060 1 | 2.5 |

## 30A ... 110B0

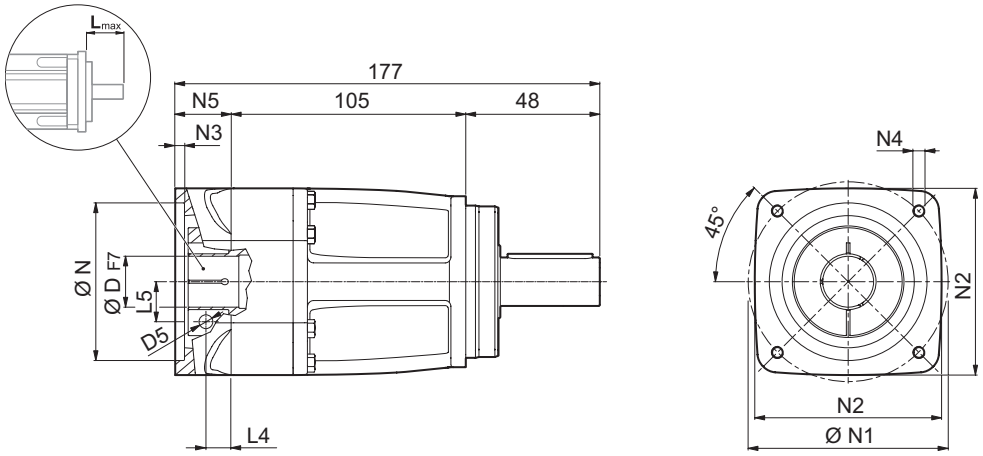


| | Kg |
|---|---|
| TQ 060 2 | 3.5 |

| | D | | | | | N | N1 | N2 | N3 | N4 | N5 | $L_{max}$ |
|---|---|---|---|---|---|---|---|---|---|---|---|---|
| **30A** | 6 | – | – | – | – | 30 | 46 | 60 | 3.5 | M4x10 | 24 | 40 |
| **40B1** | 6 | 9 | 11 | 14 | – | 40 | 63 | 60 | 3.5 | M4x10 | 24 | 40 |
| **50A1** | 6 | 9 | 11 | 14 | – | 50 | 60 | 60 | 4.0 | M4x10 | 24 | 40 |
| **50C1** | 6 | 9 | 11 | 14 | – | 50 | 70 | 60 | 4.0 | M4x10 | 24 | 40 |
| **60A2** | 6 | 9 | 11 | 14 | 19 | 60 | 75 | 80 | 4.0 | M5x12 | 24 | 40 |
| **70B1** | 6 | 9 | 11 | 14 | 19 | 70 | 90 | 80 | 4.0 | M5x12 | 24 | 40 |
| **80A2** | 6 | 9 | 11 | 14 | 19 | 80 | 100 | 100 | 4.0 | M6x14 | 24 | 40 |
| **95A** | 6 | 9 | 11 | 14 | 19 | 95 | 115 | 100 | 4.0 | M8x24 | 24 | 40 |
| **110B0** | 6 | 9 | 11 | 14 | 19 | 110 | 145 | 120 | 4.0 | M8x24 | 24 | 40 |

Please contact us for other motor adapters and input shaft bore.

# TQ 060

## FM

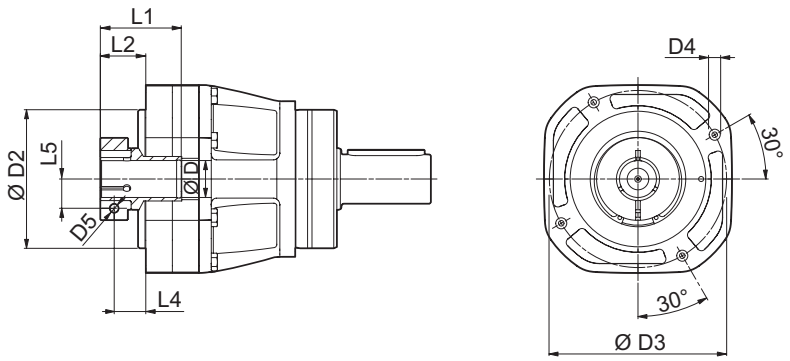


| D | D1 | D2 | D3 | D4 | D5 | L1 | L2 | L3 | L4 | L5 |
|---|---|---|---|---|---|---|---|---|---|---|
| 6 | 37 | 59 | 72 | M5x11 | M4 | 31.5 | 15.5 | 4.5 | 10.5 | 8 |
| 9 | 49 | 59 | 72 | M5x11 | M5 | 35 | 19 | 4.5 | 11.5 | 10.5 |
| 11 | 49 | 59 | 72 | M5x11 | M6 | 35 | 19 | 4.5 | 11.5 | 12.5 |
| 14 | 49 | 59 | 72 | M5x11 | M6 | 35 | 19 | 4.5 | 11.5 | 14.5 |
| 19 | 54 | 59 | 72 | M5x11 | M6 | 35 | 19 | 4.5 | 11.5 | 16.5 |

| i | $M_{n\,2}$ [Nm] | $M_{a\,2}$ [Nm] | $M_{p\,2}$ [Nm] | $n_1$ [min$^{-1}$] | $n_{1\,max}$ [min$^{-1}$] | $\varphi_S$ [arcmin] | $\varphi_R$ [arcmin] | $C_t$ [Nm/arcmin] | $R_{2\,max}$ [N] | $A_{2\,max}$ [N] | $\eta$ % | $J_G$ [kgcm$^2$] D 6 - 9 | 11 - 14 | 19 |
|---|---|---|---|---|---|---|---|---|---|---|---|---|---|---|
| TQ 060 1_3 | 21 | 32 | 60 | 3500 | 6000 | 4' | 2' | 4.8 | 1850 | 1650 | 97 | 0.36 | 0.47 | 0.51 |
| TQ 060 1_4 | 30 | 45 | 80 | 3500 | 6000 | 4' | 2' | 4.8 | 1850 | 1650 | 97 | 0.28 | 0.39 | 0.43 |
| TQ 060 1_5 | 30 | 45 | 80 | 3500 | 6000 | 4' | 2' | 4.8 | 1850 | 1650 | 97 | 0.25 | 0.36 | 0.40 |
| TQ 060 1_7 | 25 | 38 | 70 | 4000 | 6000 | 4' | 2' | 4.8 | 1850 | 1650 | 97 | 0.22 | 0.33 | 0.37 |
| TQ 060 1_10 | 20 | 30 | 55 | 4000 | 6000 | 4' | 2' | 4.8 | 1850 | 1650 | 97 | 0.21 | 0.32 | 0.36 |
| TQ 060 2_16 | 30 | 45 | 80 | 4500 | 6000 | 6' | 4' | 4.7 | 1850 | 1650 | 94 | 0.27 | 0.39 | 0.42 |
| TQ 060 2_20 | 30 | 45 | 80 | 4500 | 6000 | 6' | 4' | 4.7 | 1850 | 1650 | 94 | 0.27 | 0.39 | 0.42 |
| TQ 060 2_25 | 30 | 45 | 80 | 4500 | 6000 | 6' | 4' | 4.7 | 1850 | 1650 | 94 | 0.24 | 0.36 | 0.39 |
| TQ 060 2_28 | 30 | 45 | 80 | 4500 | 6000 | 6' | 4' | 4.7 | 1850 | 1650 | 94 | 0.22 | 0.33 | 0.37 |
| TQ 060 2_35 | 30 | 45 | 80 | 4500 | 6000 | 6' | 4' | 4.7 | 1850 | 1650 | 94 | 0.22 | 0.33 | 0.37 |
| TQ 060 2_40 | 30 | 45 | 80 | 4500 | 6000 | 6' | 4' | 4.7 | 1850 | 1650 | 94 | 0.21 | 0.32 | 0.36 |
| TQ 060 2_50 | 30 | 45 | 80 | 4500 | 6000 | 6' | 4' | 4.7 | 1850 | 1650 | 94 | 0.21 | 0.32 | 0.36 |
| TQ 060 2_70 | 25 | 38 | 70 | 5000 | 6000 | 6' | 4' | 4.7 | 1850 | 1650 | 94 | 0.21 | 0.32 | 0.36 |
| TQ 060 2_100 | 20 | 30 | 55 | 5000 | 6000 | 6' | 4' | 4.7 | 1850 | 1650 | 94 | 0.20 | 0.32 | 0.35 |

# TQ 070

## 50C ... 130A

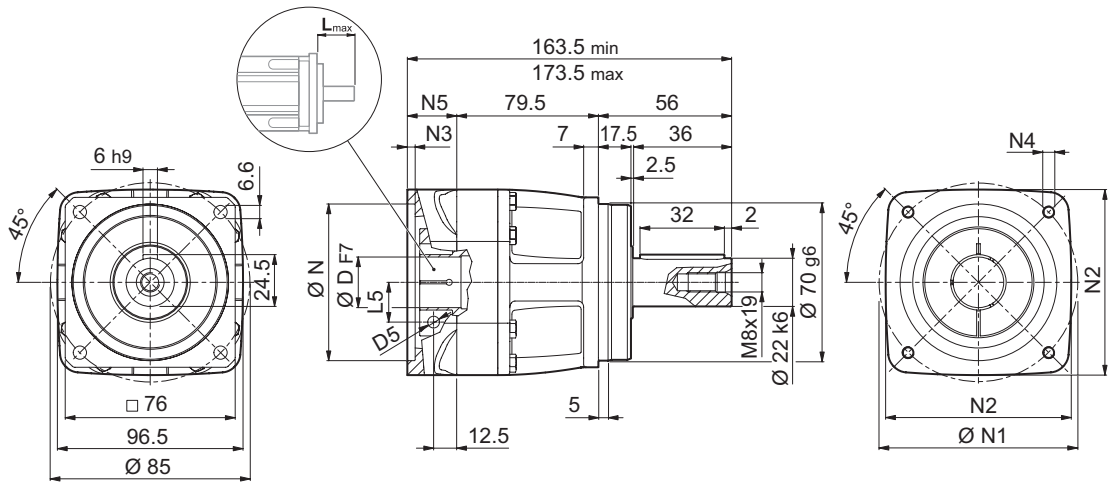


| | Kg |
|---|---|
| **TQ 070 1** | 3.6 |

## 30A ... 110B0

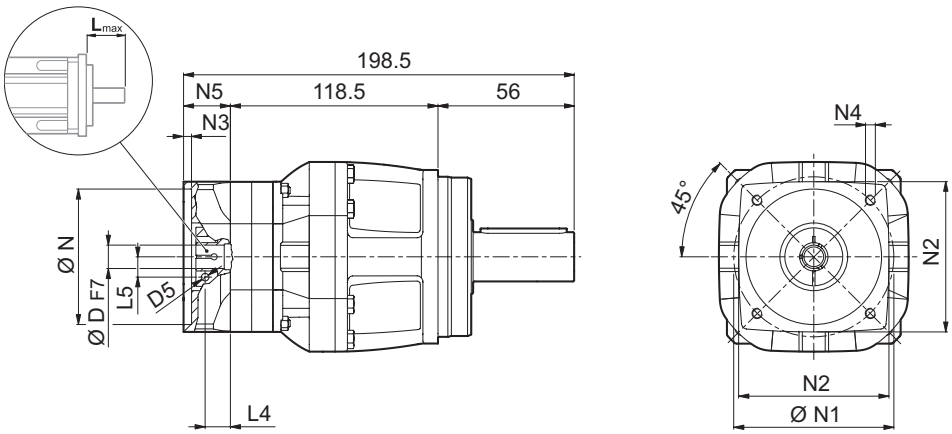


| | Kg |
|---|---|
| **TQ 070 2** | 5.0 |

| | D | | | | | | N | N1 | N2 | N3 | N4 | N5 | $L_{max}$ |
|---|---|---|---|---|---|---|---|---|---|---|---|---|---|
| **TQ 070 1** | | | | | | | | | | | | | |
| **50C2** | 6 | 9 | 11 | 14 | – | – | 50 | 70 | 80 | 6.5 | M4x12 | 28 | 50 |
| **60A3** | 6 | 9 | 11 | 14 | 19 | – | 60 | 75 | 80 | 6.5 | M5x14 | 28 | 50 |
| **70B2** | 6 | 9 | 11 | 14 | 19 | – | 70 | 90 | 80 | 6.5 | M5x14 | 28 | 50 |
| **80A2** | 6 | 9 | 11 | 14 | 19 | – | 80 | 100 | 100 | 6.5 | M6x14 | 28 | 50 |
| **95A1** | 6 | 9 | 11 | 14 | 19 | 24 | 95 | 115 | 100 | 6.5 | M8x18 | 28 | 50 |
| **110A1** | 6 | 9 | 11 | 14 | 19 | 24 | 110 | 130 | 120 | 6.5 | M8x18 | 28 | 50 |
| **110B1** | 6 | 9 | 11 | 14 | 19 | 24 | 110 | 145 | 120 | 6.5 | M8x20 | 38 | 60 |
| **130A** | 6 | 9 | 11 | 14 | 19 | 24 | 130 | 165 | 140 | 6.5 | M10x19 | 28 | 50 |
| **TQ 070 2** | | | | | | | | | | | | | |
| **30A** | 6 | – | – | – | – | – | 30 | 46 | 60 | 3.5 | M4x10 | 24 | 40 |
| **40B1** | 6 | 9 | 11 | 14 | – | – | 40 | 63 | 60 | 3.5 | M4x10 | 24 | 40 |
| **50A1** | 6 | 9 | 11 | 14 | – | – | 50 | 60 | 60 | 4.0 | M4x10 | 24 | 40 |
| **50C1** | 6 | 9 | 11 | 14 | – | – | 50 | 70 | 60 | 4.0 | M4x10 | 24 | 40 |
| **60A2** | 6 | 9 | 11 | 14 | 19 | – | 60 | 75 | 80 | 4.0 | M5x12 | 24 | 40 |
| **70B1** | 6 | 9 | 11 | 14 | 19 | – | 70 | 90 | 80 | 4.0 | M5x12 | 24 | 40 |
| **80A1** | 6 | 9 | 11 | 14 | 19 | – | 80 | 100 | 100 | 4.0 | M6x14 | 24 | 40 |
| **95A** | 6 | 9 | 11 | 14 | 19 | – | 95 | 115 | 100 | 4.0 | M8x24 | 24 | 40 |
| **110B0** | 6 | 9 | 11 | 14 | 19 | – | 110 | 145 | 120 | 4.0 | M8x24 | 24 | 40 |

Please contact us for other motor adapters and input shaft bore.

# TQ 070

**FM**

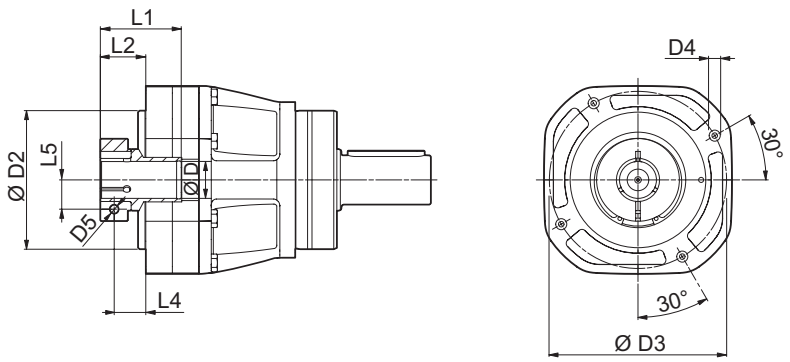


| D | D1 | D2 | D3 | D4 | D5 | L1 | L2 | L3 | L4 | L5 |
|---|---|---|---|---|---|---|---|---|---|---|
| **TQ 070 1** | | | | | | | | | | |
| 11 | 51 | 70 | 85 | M6x11 | M6 | 42 | 20 | 5 | 12.5 | 12.5 |
| 14 | 51 | 70 | 85 | M6x11 | M6 | 42 | 20 | 5 | 12.5 | 14.5 |
| 19 | 51 | 70 | 85 | M6x11 | M6 | 42 | 20 | 5 | 12.5 | 16.5 |
| 24 | 60 | 70 | 85 | M6x11 | M6 | 43.5 | 21.5 | 5 | 12.5 | 19 |
| **TQ 070 2** | | | | | | | | | | |
| 6 | 37 | 59 | 72 | M5x11 | M4 | 31.5 | 15.5 | 4.5 | 10.5 | 8 |
| 9 | 49 | 59 | 72 | M5x11 | M5 | 35 | 19 | 4.5 | 11.5 | 10.5 |
| 11 | 49 | 59 | 72 | M5x11 | M6 | 35 | 19 | 4.5 | 11.5 | 12.5 |
| 14 | 49 | 59 | 72 | M5x11 | M6 | 35 | 19 | 4.5 | 11.5 | 14.5 |
| 19 | 54 | 59 | 72 | M5x11 | M6 | 35 | 19 | 4.5 | 11.5 | 16.5 |

| i | $M_{n\,2}$ | $M_{a\,2}$ | $M_{p\,2}$ | $n_1$ | $n_{1\,max}$ | $\varphi_S$ ≤ | $\varphi_R$ | $C_t$ | SB $R_{2\,max}$ | SB $A_{2\,max}$ | HB $R_{2\,max}$ | HB $A_{2\,max}$ | $\eta$ | $J_G$ [kgcm²] D | | | |
|---|---|---|---|---|---|---|---|---|---|---|---|---|---|---|---|---|---|
| | [Nm] | [Nm] | [Nm] | [min⁻¹] | [min⁻¹] | [arcmin] | | $\frac{Nm}{arcmin}$ | [N] | [N] | [N] | [N] | % | 6 - 9 | 11 - 14 | 19 | 24 |
| **TQ 070 1_3** | 45 | 65 | 120 | 3000 | 6000 | 4' | 2' | 11.3 | 2600 | 2300 | 4200 | 3800 | 97 | – | 0.99 | 1.02 | 1.15 |
| **TQ 070 1_4** | 70 | 100 | 180 | 3000 | 6000 | 4' | 2' | 11.3 | 2600 | 2300 | 4200 | 3800 | 97 | – | 0.76 | 0.79 | 0.92 |
| **TQ 070 1_5** | 70 | 100 | 180 | 3000 | 6000 | 4' | 2' | 11.3 | 2600 | 2300 | 4200 | 3800 | 97 | – | 0.67 | 0.70 | 0.83 |
| **TQ 070 1_7** | 60 | 90 | 160 | 3500 | 6000 | 4' | 2' | 11.3 | 2600 | 2300 | 4200 | 3800 | 97 | – | 0.59 | 0.62 | 0.75 |
| **TQ 070 1_10** | 40 | 60 | 110 | 3500 | 6000 | 4' | 2' | 11.3 | 2600 | 2300 | 4200 | 3800 | 97 | – | 0.55 | 0.58 | 0.71 |
| **TQ 070 2_16** | 70 | 100 | 180 | 3500 | 6000 | 6' | 4' | 11.3 | 2600 | 2300 | 4200 | 3800 | 94 | 0.28 | 0.40 | 0.43 | – |
| **TQ 070 2_20** | 70 | 100 | 180 | 3500 | 6000 | 6' | 4' | 11.3 | 2600 | 2300 | 4200 | 3800 | 94 | 0.28 | 0.39 | 0.43 | – |
| **TQ 070 2_25** | 70 | 100 | 180 | 3500 | 6000 | 6' | 4' | 11.3 | 2600 | 2300 | 4200 | 3800 | 94 | 0.25 | 0.36 | 0.40 | – |
| **TQ 070 2_28** | 70 | 100 | 180 | 3500 | 6000 | 6' | 4' | 11.3 | 2600 | 2300 | 4200 | 3800 | 94 | 0.22 | 0.34 | 0.37 | – |
| **TQ 070 2_35** | 70 | 100 | 180 | 3500 | 6000 | 6' | 4' | 11.3 | 2600 | 2300 | 4200 | 3800 | 94 | 0.22 | 0.34 | 0.37 | – |
| **TQ 070 2_40** | 70 | 100 | 180 | 3500 | 6000 | 6' | 4' | 11.3 | 2600 | 2300 | 4200 | 3800 | 94 | 0.21 | 0.32 | 0.36 | – |
| **TQ 070 2_50** | 70 | 100 | 180 | 3500 | 6000 | 6' | 4' | 11.3 | 2600 | 2300 | 4200 | 3800 | 94 | 0.21 | 0.32 | 0.36 | – |
| **TQ 070 2_70** | 60 | 90 | 160 | 4000 | 6000 | 6' | 4' | 11.3 | 2600 | 2300 | 4200 | 3800 | 94 | 0.21 | 0.32 | 0.36 | – |
| **TQ 070 2_100** | 40 | 60 | 110 | 4500 | 6000 | 6' | 4' | 11.3 | 2600 | 2300 | 4200 | 3800 | 94 | 0.21 | 0.32 | 0.36 | – |

# TQ 090

## 60A4 ... 180A1

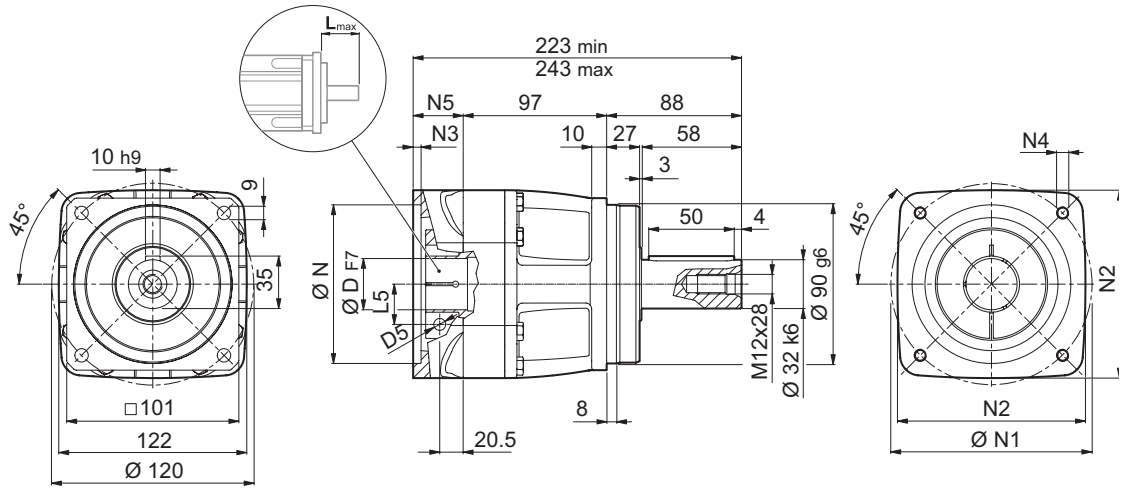


| | Kg |
|---|---|
| TQ 090 1 | 7.6 |

## 50C2 ... 130A

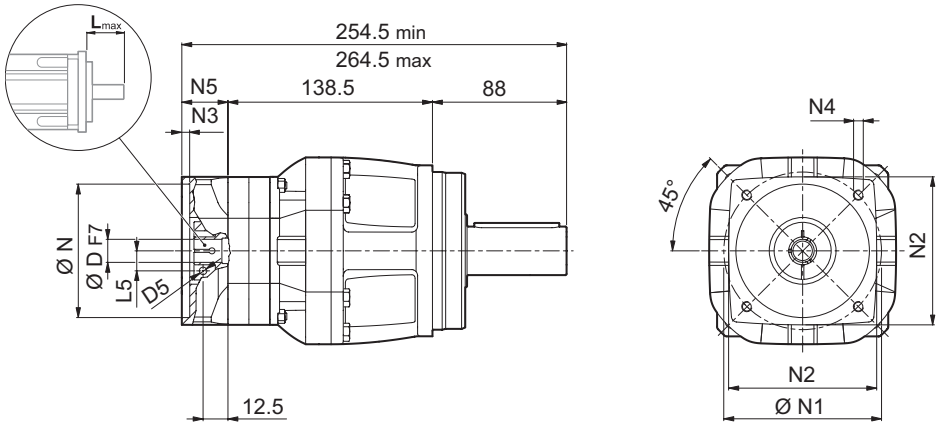


| | Kg |
|---|---|
| TQ 090 2 | 8.9 |

| | D | | | | | | | N | N1 | N2 | N3 | N4 | N5 | $L_{max}$ |
|---|---|---|---|---|---|---|---|---|---|---|---|---|---|---|
| **TQ 090 1** | | | | | | | | | | | | | | |
| **60A4** | 11 | 14 | 19 | – | – | – | – | 60 | 75 | 100 | 6.5 | M5x14 | 38 | 60 |
| **80A3** | 11 | 14 | 19 | – | – | – | – | 80 | 100 | 100 | 6.5 | M6x14 | 38 | 60 |
| **95A2** | 11 | 14 | 19 | 24 | 28 | – | – | 95 | 115 | 100 | 6.5 | M8x18 | 38 | 60 |
| **110A2** | 11 | 14 | 19 | 24 | – | – | – | 110 | 130 | 122 | 6.5 | M8x20 | 38 | 60 |
| **110B1** | 11 | 14 | 19 | 24 | 28 | – | – | 110 | 145 | 122 | 6.5 | M8x20 | 38 | 60 |
| **130A1** | 11 | 14 | 19 | 24 | 28 | 32 | – | 130 | 165 | 140 | 6.5 | M10x20 | 38 | 60 |
| **180A** | 11 | 14 | 19 | 24 | 28 | 32 | – | 180 | 215 | 190 | 6.5 | M14x38 | 38 | 60 |
| **180A1** | 11 | 14 | 19 | 24 | 28 | 32 | 38 | 180 | 215 | 190 | 6.5 | M14x28 | 58 | 80 |
| **TQ 090 2** | | | | | | | | | | | | | | |
| **50C2** | 11 | 14 | – | – | – | – | – | 50 | 70 | 80 | 6.5 | M4x12 | 28 | 50 |
| **60A3** | 11 | 14 | 19 | – | – | – | – | 60 | 75 | 80 | 6.5 | M5x14 | 28 | 50 |
| **70B2** | 11 | 14 | 19 | – | – | – | – | 70 | 90 | 80 | 6.5 | M5x14 | 28 | 50 |
| **80A2** | 11 | 14 | 19 | – | – | – | – | 80 | 100 | 100 | 6.5 | M6x14 | 28 | 50 |
| **95A1** | 11 | 14 | 19 | 24 | – | – | – | 95 | 115 | 100 | 6.5 | M8x18 | 28 | 50 |
| **110A1** | 11 | 14 | 19 | 24 | – | – | – | 110 | 130 | 120 | 6.5 | M8x18 | 28 | 50 |
| **110B1** | 11 | 14 | 19 | 24 | – | – | – | 110 | 145 | 120 | 6.5 | M8x20 | 38 | 60 |
| **130A** | 11 | 14 | 19 | 24 | – | – | – | 130 | 165 | 140 | 6.5 | M10x19 | 28 | 50 |

Please contact us for other motor adapters and input shaft bore.

# TQ 090

## FM

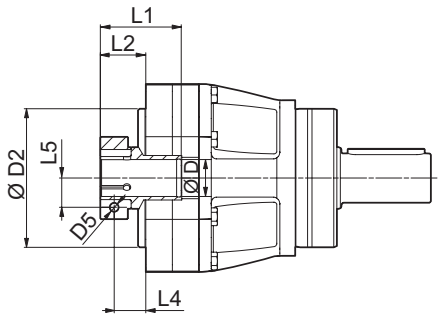


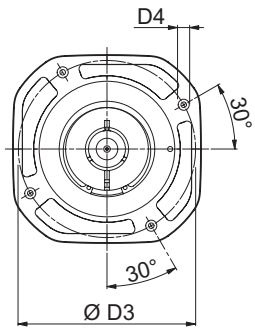


| D | D1 | D2 | D3 | D4 | D5 | L1 | L2 | L3 | L4 | L5 |
|---|---|---|---|---|---|---|---|---|---|---|
| **TQ 090 1** | | | | | | | | | | |
| 14 | 51 | 90 | 115 | M8x13 | M6 | 50 | 28 | 6.5 | 20.5 | 14.5 |
| 19 | 51 | 90 | 115 | M8x13 | M6 | 50 | 28 | 6.5 | 20.5 | 16.5 |
| 24 | 60 | 90 | 115 | M8x13 | M6 | 51.5 | 29.5 | 6.5 | 20.5 | 19 |
| 28 | 72 | 90 | 115 | M8x13 | M8 | 51.5 | 29.5 | 6.5 | 20.5 | 22.5 |
| 32 | 72 | 90 | 115 | M8x13 | M8 | 51.5 | 29.5 | 6.5 | 20.5 | 24.5 |
| 38 | 80 | 90 | 115 | M8x13 | M8 | 51.5 | 29.5 | 6.5 | 20.5 | 28 |
| **TQ 090 2** | | | | | | | | | | |
| 11 | 51 | 70 | 85 | M6x11 | M6 | 42 | 20 | 5 | 12.5 | 12.5 |
| 14 | 51 | 70 | 85 | M6x11 | M6 | 42 | 20 | 5 | 12.5 | 14.5 |
| 19 | 51 | 70 | 85 | M6x11 | M6 | 42 | 20 | 5 | 12.5 | 16.5 |
| 24 | 60 | 70 | 85 | M6x11 | M6 | 43.5 | 21.5 | 5 | 12.5 | 19 |

| i | $M_{n2}$ | $M_{a2}$ | $M_{p2}$ | $n_1$ | $n_{1\,max}$ | $\varphi_S$ ≤ | $\varphi_R$ ≤ | $C_t$ | SB $R_{2\,max}$ | SB $A_{2\,max}$ | HB $R_{2\,max}$ | HB $A_{2\,max}$ | $\eta$ | $J_G$ [kgcm²] D | | | | |
|---|---|---|---|---|---|---|---|---|---|---|---|---|---|---|---|---|---|---|
| | [Nm] | [Nm] | [Nm] | [min⁻¹] | [min⁻¹] | [arcmin] | | [Nm/arcmin] | [N] | [N] | [N] | [N] | % | 11 | 14 - 19 | 24 | 28 | 32-38 |
| **TQ 090 1_3** | 130 | 200 | 400 | 2500 | 4500 | 3' | 2' | 28 | 4800 | 4300 | 6600 | 5900 | 97 | – | 2.18 | 2.30 | 2.69 | 4.48 |
| **TQ 090 1_4** | 200 | 300 | 500 | 2500 | 4500 | 3' | 2' | 28 | 4800 | 4300 | 6600 | 5900 | 97 | – | 1.63 | 1.75 | 2.14 | 3.93 |
| **TQ 090 1_5** | 180 | 280 | 500 | 2500 | 4500 | 3' | 2' | 28 | 4800 | 4300 | 6600 | 5900 | 97 | – | 1.39 | 1.52 | 1.90 | 3.70 |
| **TQ 090 1_7** | 160 | 250 | 500 | 3000 | 4500 | 3' | 2' | 28 | 4800 | 4300 | 6600 | 5900 | 97 | – | 1.19 | 1.32 | 1.70 | 3.50 |
| **TQ 090 1_10** | 110 | 170 | 350 | 3000 | 4500 | 3' | 2' | 28 | 4800 | 4300 | 6600 | 5900 | 97 | – | 1.08 | 1.21 | 1.59 | 3.39 |
| **TQ 090 2_16** | 200 | 300 | 500 | 3000 | 4500 | 5' | 3' | 28 | 4800 | 4300 | 6600 | 5900 | 94 | 0.70 | 0.80 | 0.94 | – | – |
| **TQ 090 2_20** | 180 | 280 | 500 | 3000 | 4500 | 5' | 3' | 28 | 4800 | 4300 | 6600 | 5900 | 94 | 0.69 | 0.79 | 0.92 | – | – |
| **TQ 090 2_25** | 180 | 280 | 500 | 3000 | 4500 | 5' | 3' | 28 | 4800 | 4300 | 6600 | 5900 | 94 | 0.60 | 0.70 | 0.83 | – | – |
| **TQ 090 2_28** | 200 | 300 | 500 | 3000 | 4500 | 5' | 3' | 28 | 4800 | 4300 | 6600 | 5900 | 94 | 0.53 | 0.63 | 0.76 | – | – |
| **TQ 090 2_35** | 180 | 280 | 500 | 3000 | 4500 | 5' | 3' | 28 | 4800 | 4300 | 6600 | 5900 | 94 | 0.52 | 0.62 | 0.75 | – | – |
| **TQ 090 2_40** | 200 | 300 | 500 | 3000 | 4500 | 5' | 3' | 28 | 4800 | 4300 | 6600 | 5900 | 94 | 0.48 | 0.58 | 0.71 | – | – |
| **TQ 090 2_50** | 180 | 280 | 500 | 3500 | 4500 | 5' | 3' | 28 | 4800 | 4300 | 6600 | 5900 | 94 | 0.48 | 0.58 | 0.71 | – | – |
| **TQ 090 2_70** | 160 | 250 | 500 | 4000 | 4500 | 5' | 3' | 28 | 4800 | 4300 | 6600 | 5900 | 94 | 0.48 | 0.58 | 0.71 | – | – |
| **TQ 090 2_100** | 110 | 170 | 350 | 4000 | 4500 | 5' | 3' | 28 | 4800 | 4300 | 6600 | 5900 | 94 | 0.48 | 0.58 | 0.71 | – | – |

# TQ 130

## 80A3 ... 200A

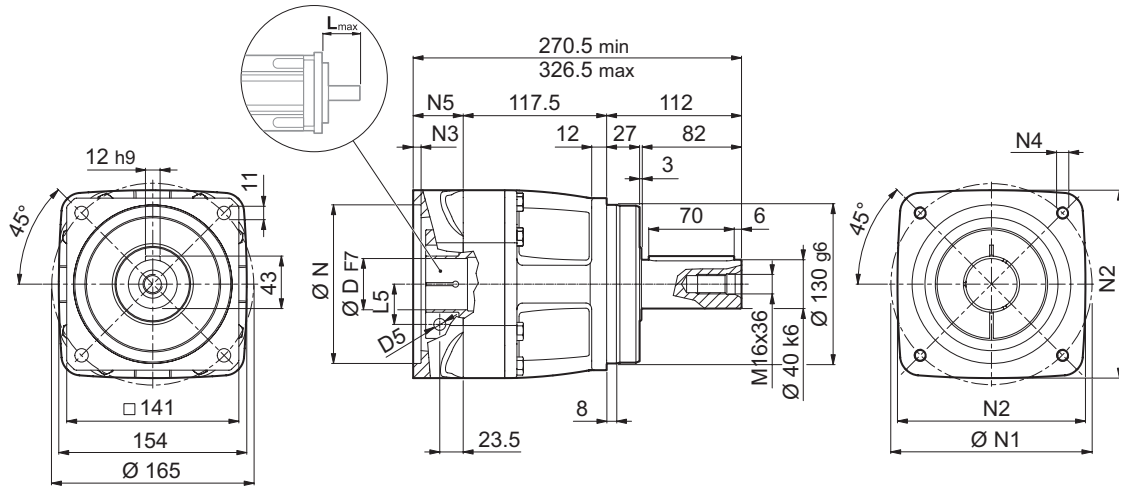


| | Kg |
|---|---|
| **TQ 130 1** | 15.6 |

## 60A4 ... 180A1

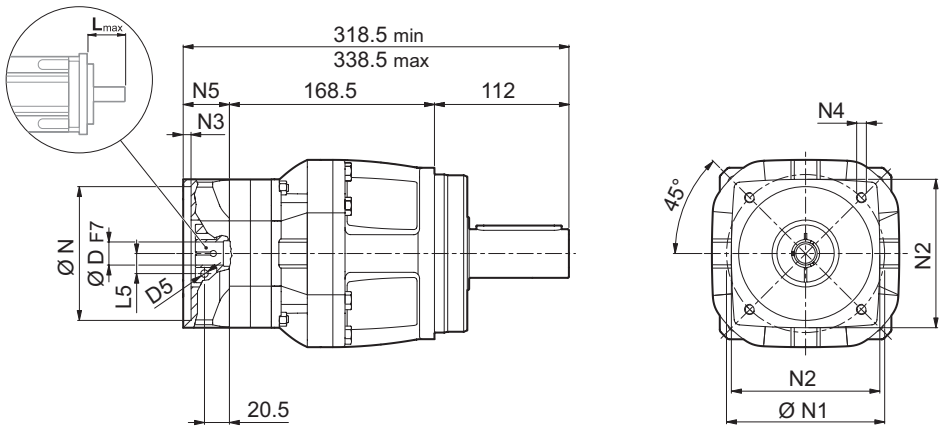


| | Kg |
|---|---|
| **TQ 130 2** | 19.1 |

| | D | | | | | | | N | N1 | N2 | N3 | N4 | N5 | $L_{max}$ |
|---|---|---|---|---|---|---|---|---|---|---|---|---|---|---|
| **TQ 130 1** | | | | | | | | | | | | | | |
| **80A3** | 14 | 19 | – | – | – | – | – | 80 | 100 | 130 | 6.5 | M6x14 | 41 | 60 |
| **95A2** | 14 | 19 | 24 | 28 | – | – | – | 95 | 115 | 130 | 6.5 | M8x18 | 41 | 60 |
| **110A2** | 14 | 19 | 24 | – | – | – | – | 110 | 130 | 130 | 6.5 | M8x20 | 41 | 60 |
| **110B1** | 14 | 19 | 24 | 28 | – | – | – | 110 | 145 | 130 | 6.5 | M8x20 | 41 | 60 |
| **130A1** | 14 | 19 | 24 | 28 | 32 | – | – | 130 | 165 | 154 | 6.5 | M10x20 | 41 | 60 |
| **180A** | 14 | 19 | 24 | 28 | 32 | – | – | 180 | 215 | 190 | 6.5 | M14x28 | 41 | 60 |
| **180A1** | 14 | 19 | 24 | 28 | 32 | 38 | – | 180 | 215 | 190 | 6.5 | M14x28 | 61 | 80 |
| **200A** | 14 | 19 | 24 | 28 | 32 | 38 | 42 | 200 | 235 | 210 | 6.5 | M14x28 | 97 | 110 |
| **TQ 130 2** | | | | | | | | | | | | | | |
| **60A4** | 14 | 19 | – | – | – | – | – | 60 | 75 | 100 | 6.5 | M5x14 | 38 | 60 |
| **80A3** | 14 | 19 | – | – | – | – | – | 80 | 100 | 100 | 6.5 | M6x14 | 38 | 60 |
| **95A2** | 14 | 19 | 24 | 28 | – | – | – | 95 | 115 | 100 | 6.5 | M8x18 | 38 | 60 |
| **110A2** | 14 | 19 | 24 | – | – | – | – | 110 | 130 | 122 | 6.5 | M8x20 | 38 | 60 |
| **110B1** | 14 | 19 | 24 | 28 | – | – | – | 110 | 145 | 122 | 6.5 | M8x20 | 38 | 60 |
| **130A1** | 14 | 19 | 24 | 28 | 32 | – | – | 130 | 165 | 140 | 6.5 | M10x20 | 38 | 60 |
| **180A** | 14 | 19 | 24 | 28 | 32 | – | – | 180 | 215 | 190 | 6.5 | M14x38 | 38 | 60 |
| **180A1** | 14 | 19 | 24 | 28 | 32 | 38 | – | 180 | 215 | 190 | 6.5 | M14x28 | 58 | 80 |

Please contact us for other motor adapters and input shaft bore.

# TQ 130

**FM**

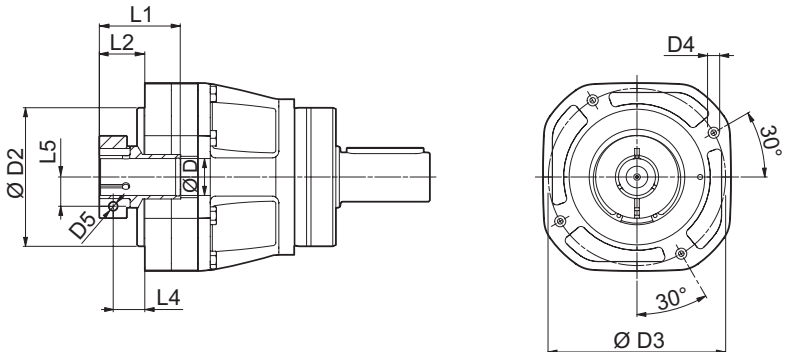


| D | D1 | D2 | D3 | D4 | D5 | L1 | L2 | L3 | L4 | L5 |
|---|---|---|---|---|---|---|---|---|---|---|
| **TQ 130 1** | | | | | | | | | | |
| 19 | 54 | 120 | 140 | M10x16 | M6 | 50 | 31 | 7.5 | 23.5 | 16.5 |
| 24 | 70 | 120 | 140 | M10x16 | M6 | 51.5 | 32.5 | 7.5 | 23.5 | 19 |
| 28 | 70 | 120 | 140 | M10x16 | M8 | 51.5 | 32.5 | 7.5 | 23.5 | 22.5 |
| 32 | 72 | 120 | 140 | M10x16 | M8 | 51.5 | 32.5 | 7.5 | 23.5 | 24.5 |
| 38 | 100 | 120 | 140 | M10x16 | M8 | 54 | 35 | 7.5 | 23.5 | 28 |
| 42 | 114 | 120 | 140 | M10x16 | M10 | 51.5 | 38.5 | 7.5 | 23.5 | 33 |
| **TQ 130 2** | | | | | | | | | | |
| 14 | 51 | 90 | 115 | M8x13 | M6 | 50 | 28 | 6.5 | 20.5 | 14.5 |
| 19 | 51 | 90 | 115 | M8x13 | M6 | 50 | 28 | 6.5 | 20.5 | 16.5 |
| 24 | 60 | 90 | 115 | M8x13 | M6 | 51.5 | 29.5 | 6.5 | 20.5 | 19 |
| 28 | 72 | 90 | 115 | M8x13 | M8 | 51.5 | 29.5 | 6.5 | 20.5 | 22.5 |
| 32 | 72 | 90 | 115 | M8x13 | M8 | 51.5 | 29.5 | 6.5 | 20.5 | 24.5 |
| 38 | 80 | 90 | 115 | M8x13 | M8 | 51.5 | 29.5 | 6.5 | 20.5 | 28 |

| i | $M_{n2}$ | $M_{a2}$ | $M_{p2}$ | $n_1$ | $n_{1\,max}$ | $\varphi_S$ ≤ | $\varphi_R$ ≤ | $C_t$ | $R_{2\,max}$ | $A_{2\,max}$ | $\eta$ | $J_G$ [kgcm²] D | | | | |
|---|---|---|---|---|---|---|---|---|---|---|---|---|---|---|---|---|
| | [Nm] | [Nm] | [Nm] | [min⁻¹] | [min⁻¹] | [arcmin] | | [Nm/arcmin] | [N] | [N] | % | 14 | 19 - 24 | 28 - 32 | 38 | 42 |
| TQ 130 1_3 | 260 | 400 | 900 | 2100 | 4000 | 3' | 2' | 59 | 9000 | 8000 | 97 | – | 10.02 | 10.48 | 11.12 | 17.12 |
| TQ 130 1_4 | 400 | 600 | 1000 | 2100 | 4000 | 3' | 2' | 59 | 9000 | 8000 | 97 | – | 6.38 | 6.85 | 7.49 | 13.49 |
| TQ 130 1_5 | 400 | 600 | 1000 | 2500 | 4000 | 3' | 2' | 59 | 9000 | 8000 | 97 | – | 5.01 | 5.47 | 6.11 | 12.11 |
| TQ 130 1_7 | 360 | 550 | 950 | 2500 | 4000 | 3' | 2' | 59 | 9000 | 8000 | 97 | – | 3.82 | 4.28 | 4.93 | 10.93 |
| TQ 130 1_10 | 280 | 420 | 900 | 2500 | 4000 | 3' | 2' | 59 | 9000 | 8000 | 97 | – | 3.15 | 3.61 | 4.25 | 10.25 |
| TQ 130 2_16 | 400 | 600 | 1000 | 2800 | 4000 | 5' | 3' | 58 | 9000 | 8000 | 94 | 1.72 | 1.87 | 3.53 | 4.05 | – |
| TQ 130 2_20 | 400 | 600 | 1000 | 2800 | 4000 | 5' | 3' | 58 | 9000 | 8000 | 94 | 1.64 | 1.80 | 3.46 | 3.98 | – |
| TQ 130 2_25 | 400 | 600 | 1000 | 2800 | 4000 | 5' | 3' | 58 | 9000 | 8000 | 94 | 1.39 | 1.55 | 3.21 | 3.73 | – |
| TQ 130 2_28 | 400 | 600 | 1000 | 2800 | 4000 | 5' | 3' | 58 | 9000 | 8000 | 94 | 1.20 | 1.36 | 3.02 | 3.54 | – |
| TQ 130 2_35 | 400 | 600 | 1000 | 2800 | 4000 | 5' | 3' | 58 | 9000 | 8000 | 94 | 1.17 | 1.33 | 2.99 | 3.51 | – |
| TQ 130 2_40 | 400 | 600 | 1000 | 3200 | 4000 | 5' | 3' | 58 | 9000 | 8000 | 94 | 1.07 | 1.23 | 2.89 | 3.41 | – |
| TQ 130 2_50 | 400 | 600 | 1000 | 3200 | 4000 | 5' | 3' | 58 | 9000 | 8000 | 94 | 1.06 | 1.21 | 2.87 | 3.39 | – |
| TQ 130 2_70 | 360 | 550 | 950 | 3500 | 4000 | 5' | 3' | 58 | 9000 | 8000 | 94 | 1.05 | 1.20 | 2.86 | 3.38 | – |
| TQ 130 2_100 | 280 | 420 | 900 | 4000 | 4000 | 5' | 3' | 58 | 9000 | 8000 | 94 | 1.04 | 1.20 | 2.86 | 3.38 | – |

# TQ 160

## 95A2 ... 230A

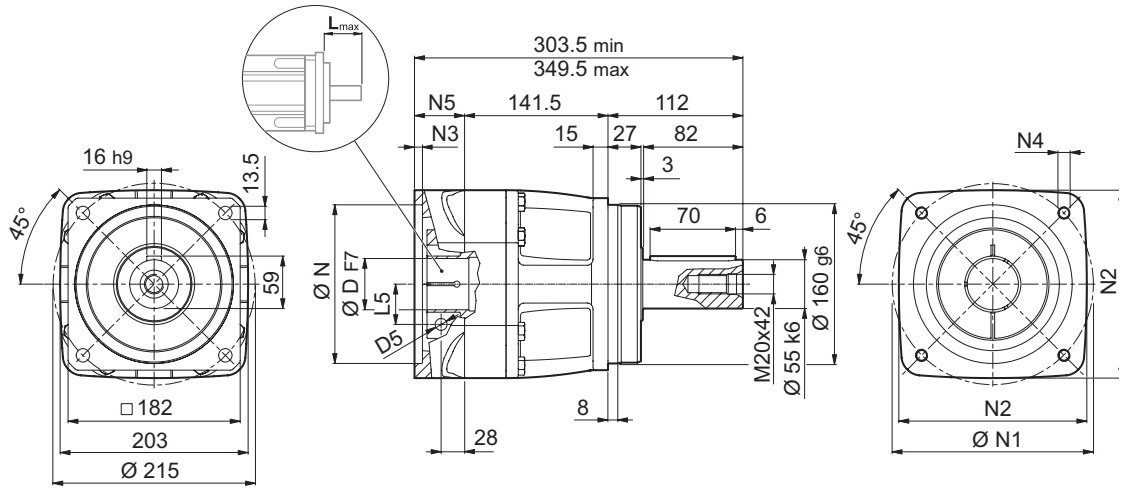


| | Kg |
|---|---|
| **TQ 160 1** | 29.7 |

## 80A3 ... 200A

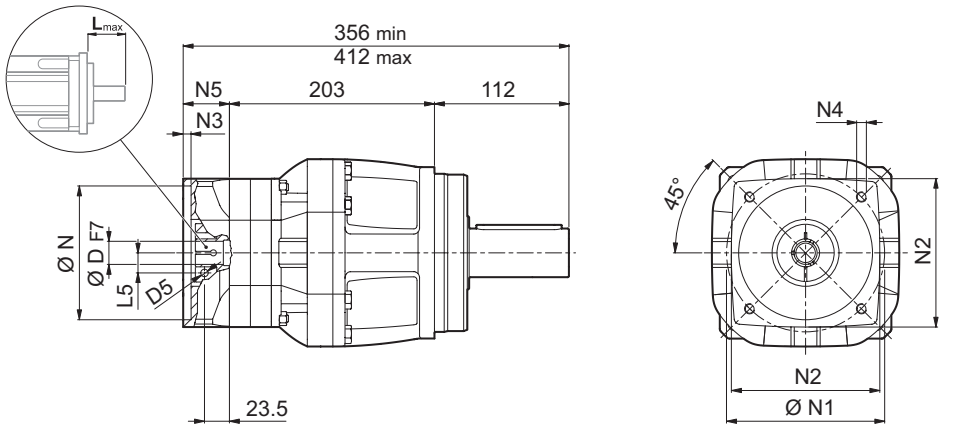


| | Kg |
|---|---|
| **TQ 160 2** | 37.4 |

| | D | | | | | | | N | N1 | N2 | N3 | N4 | N5 | $L_{max}$ |
|---|---|---|---|---|---|---|---|---|---|---|---|---|---|---|
| **TQ 160 1** | | | | | | | | | | | | | | |
| **95A2** | 19 | 24 | 28 | – | – | – | – | 95 | 115 | 158 | 6.5 | M8x20 | 50 | 60 |
| **110A2** | 19 | 24 | – | – | – | – | – | 110 | 130 | 158 | 6.5 | M8x20 | 50 | 60 |
| **130A1** | 19 | 24 | 28 | 32 | – | – | – | 130 | 165 | 158 | 6.5 | M10x20 | 50 | 60 |
| **180A** | 19 | 24 | 28 | 32 | – | – | – | 180 | 215 | 203 | 6.5 | M14x28 | 50 | 60 |
| **180A1** | 19 | 24 | 28 | 32 | 38 | – | – | 180 | 215 | 205 | 6.5 | M14x28 | 60 | 80 |
| **200A** | 19 | 24 | 28 | 32 | 38 | 42 | 48 | 200 | 235 | 220 | 6.5 | M14x28 | 96 | 110 |
| **230A** | 19 | 24 | 28 | 32 | 38 | 42 | 48 | 230 | 265 | 240 | 6.5 | M14x28 | 96 | 110 |
| **TQ 160 2** | | | | | | | | | | | | | | |
| **80A3** | 19 | – | – | – | – | – | – | 80 | 100 | 130 | 6.5 | M6x14 | 41 | 60 |
| **95A2** | 19 | 24 | 28 | – | – | – | – | 95 | 115 | 130 | 6.5 | M8x18 | 41 | 60 |
| **110A2** | 19 | 24 | – | – | – | – | – | 110 | 130 | 130 | 6.5 | M8x20 | 41 | 60 |
| **110B1** | 19 | 24 | 28 | – | – | – | – | 110 | 145 | 130 | 6.5 | M8x20 | 41 | 60 |
| **130A1** | 19 | 24 | 28 | 32 | – | – | – | 130 | 165 | 154 | 6.5 | M10x20 | 41 | 60 |
| **180A** | 19 | 24 | 28 | 32 | – | – | – | 180 | 215 | 190 | 6.5 | M14x28 | 41 | 60 |
| **180A1** | 19 | 24 | 28 | 32 | 38 | – | – | 180 | 215 | 190 | 6.5 | M14x28 | 61 | 80 |
| **200A** | 19 | 24 | 28 | 32 | 38 | 42 | – | 200 | 235 | 210 | 6.5 | M14x28 | 97 | 110 |

Please contact us for other motor adapters and input shaft bore.

# TQ 160

**FM**

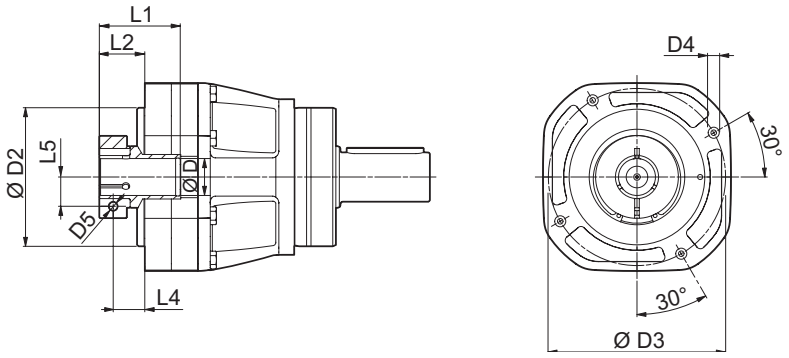


| D | D1 | D2 | D3 | D4 | D5 | L1 | L2 | L3 | L4 | L5 |
|---|---|---|---|---|---|---|---|---|---|---|
| **TQ 160 1** | | | | | | | | | | |
| 24 | 58 | 150 | 175 | M12x20 | M6 | 47 | 37 | 9.5 | 28 | 19 |
| 28 | 70 | 150 | 175 | M12x20 | M8 | 47 | 37 | 9.5 | 28 | 22.5 |
| 32 | 72 | 150 | 175 | M12x20 | M8 | 47 | 37 | 9.5 | 28 | 24.5 |
| 38 | 100 | 150 | 175 | M12x20 | M8 | 59.5 | 39.5 | 9.5 | 28 | 28 |
| 42 | 114 | 150 | 175 | M12x20 | M10 | 57 | 43 | 9.5 | 28 | 33 |
| 48 | 125 | 150 | 175 | M12x20 | M12 | 57 | 43 | 9.5 | 28 | 36.5 |
| **TQ 160 2** | | | | | | | | | | |
| 19 | 54 | 120 | 140 | M10x16 | M6 | 50 | 31 | 7.5 | 23.5 | 16.5 |
| 24 | 70 | 120 | 140 | M10x16 | M6 | 51.5 | 32.5 | 7.5 | 23.5 | 19 |
| 28 | 70 | 120 | 140 | M10x16 | M8 | 51.5 | 32.5 | 7.5 | 23.5 | 22.5 |
| 32 | 72 | 120 | 140 | M10x16 | M8 | 51.5 | 32.5 | 7.5 | 23.5 | 24.5 |
| 38 | 100 | 120 | 140 | M10x16 | M8 | 54 | 35 | 7.5 | 23.5 | 28 |
| 42 | 114 | 120 | 140 | M10x16 | M10 | 51.5 | 38.5 | 7.5 | 23.5 | 33 |

| i | $M_{n2}$ | $M_{a2}$ | $M_{p2}$ | $n_1$ | $n_{1\,max}$ | $\varphi_S$ ≤ | $\varphi_R$ ≤ | $C_t$ | $R_{2\,max}$ | $A_{2\,max}$ | η | $J_G$ [kgcm²] D | | | | |
|---|---|---|---|---|---|---|---|---|---|---|---|---|---|---|---|---|
| | [Nm] | [Nm] | [Nm] | [min⁻¹] | [min⁻¹] | [arcmin] | | [Nm/arcmin] | [N] | [N] | % | 19 | 24 - 28 | 32 - 38 | 42 | 48 |
| TQ 160 1_3 | 530 | 800 | 1500 | 1500 | 3500 | 3' | 2' | 170 | 15000 | 13000 | 97 | – | 29.58 | 29.99 | 32.89 | 45.99 |
| TQ 160 1_4 | 800 | 1200 | 2000 | 1500 | 3500 | 3' | 2' | 170 | 15000 | 13000 | 97 | – | 18.03 | 18.44 | 21.33 | 34.44 |
| TQ 160 1_5 | 800 | 1200 | 2000 | 1800 | 3500 | 3' | 2' | 170 | 15000 | 13000 | 97 | – | 11.76 | 12.17 | 15.06 | 28.17 |
| TQ 160 1_7 | 750 | 1150 | 2000 | 2500 | 3500 | 3' | 2' | 170 | 15000 | 13000 | 97 | – | 9.27 | 9.68 | 12.58 | 25.68 |
| TQ 160 1_10 | 550 | 850 | 1600 | 2500 | 3500 | 3' | 2' | 170 | 15000 | 13000 | 97 | – | 7.05 | 7.46 | 10.35 | 23.46 |
| TQ 160 2_16 | 800 | 1200 | 2000 | 2800 | 3500 | 5' | 3' | 170 | 15000 | 13000 | 94 | 6.52 | 7.05 | 7.77 | 13.77 | – |
| TQ 160 2_20 | 800 | 1200 | 2000 | 2800 | 3500 | 5' | 3' | 170 | 15000 | 13000 | 94 | 6.16 | 6.69 | 7.41 | 13.41 | – |
| TQ 160 2_25 | 800 | 1200 | 2000 | 2800 | 3500 | 5' | 3' | 170 | 15000 | 13000 | 94 | 4.81 | 5.34 | 6.06 | 12.06 | – |
| TQ 160 2_28 | 800 | 1200 | 2000 | 2800 | 3500 | 5' | 3' | 170 | 15000 | 13000 | 94 | 3.77 | 4.30 | 5.02 | 11.02 | – |
| TQ 160 2_35 | 800 | 1200 | 2000 | 2800 | 3500 | 5' | 3' | 170 | 15000 | 13000 | 94 | 3.65 | 4.18 | 4.90 | 10.90 | – |
| TQ 160 2_40 | 800 | 1200 | 2000 | 2800 | 3500 | 5' | 3' | 170 | 15000 | 13000 | 94 | 3.05 | 3.57 | 4.30 | 10.30 | – |
| TQ 160 2_50 | 800 | 1200 | 2000 | 2800 | 3500 | 5' | 3' | 170 | 15000 | 13000 | 94 | 2.99 | 3.52 | 4.24 | 10.24 | – |
| TQ 160 2_70 | 750 | 1150 | 2000 | 3000 | 3500 | 5' | 3' | 170 | 15000 | 13000 | 94 | 2.97 | 3.50 | 4.22 | 10.22 | – |
| TQ 160 2_100 | 550 | 850 | 1600 | 3000 | 3500 | 5' | 3' | 170 | 15000 | 13000 | 94 | 2.95 | 3.48 | 4.20 | 10.20 | – |